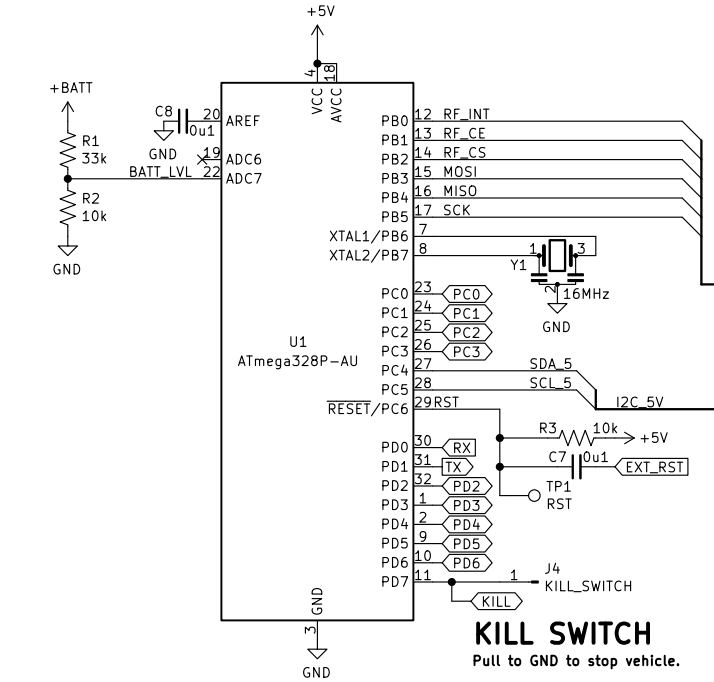

KILL SWITCH

Pull to GND to stop vehicle.

Control

Uses an ATmega328P microcontroller running at 16MHz to control the vehicle. Processes inputs from communications and replies with vehicle status. Collects sensor data to combine with the instructions recieved to determine required output. This is fed into PID loops and kinematic models to exectute it as best possible.

Communication

Uses an nRF24L01 module to communicate with base station. Supports ranges up to 1.1km without a special antenna and lowered data rates.

PA+LNA modules preferred.

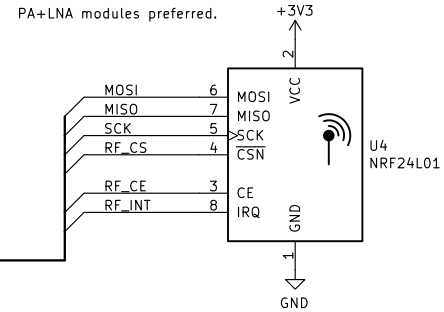

Accelerometer and Gyroscope

Inertia Measuring Unit (IMU) capable of measuring acceleration (up to 16G) and rotation (up to 2000 deg/s) about any axis. Used for stabilization of vehicle.

IMU I2C address is 0x69

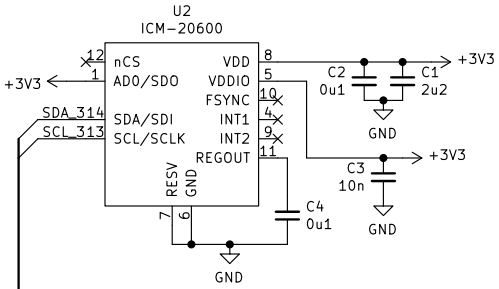

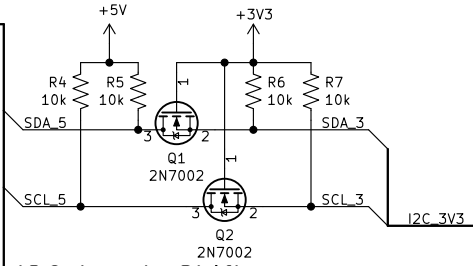

I2C Level-Shifter

Enables safe communication between 3.3V and 5V systems. Based on the principle of I2C being an "open-drain" system.

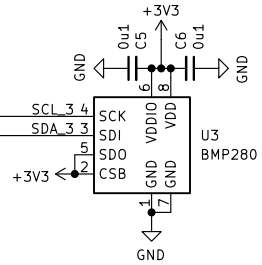

Barometer

Measures the air pressure digitally.
The pressure is used to deduce altitude.

Operating range: 300 to 1100hPa
Equivalent to: -500 to +9000m
1m in altitude is a change of 0.12hPa.

Barometer} I2C address is 0x77

I2C Connector

Connects to the external systems, primarily for the motors. Assumes sytems are 5V tolerant. Also used to supply power to flight board from an external 5V regulator if needed.

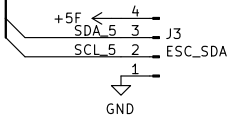

Extra Input/Output

Unused pins from the ATmega (and an additional KILL connect) for the easy implementation of custom functionality and features.

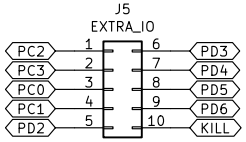

Power

5V power is used for the ATmega, the rest of the system operates on 3.3V, notably the sensors. 5V is supplied either externally or using the built in linear regulator. A solder jumper is used to decide between the two sources. The selected 5V is then further regulated down to 3.3V by another linear regulator. Linear regulators were used to reduce footprint and minimize noise on the sensitive sensors. Efficiency is not a primary concern due to their low power draws.

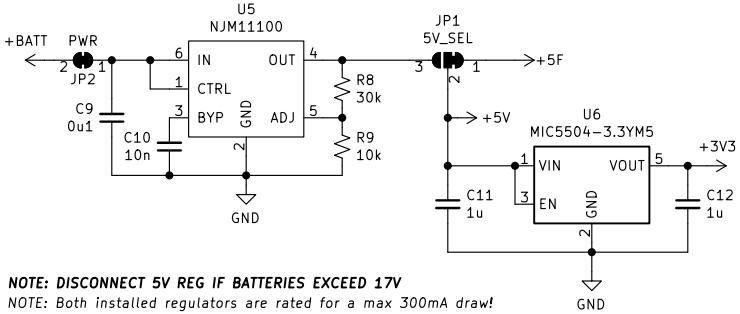

NOTE: DISCONNECT 5V REG IF BATTERIES EXCEED 17V

NOTE: Both installed regulators are rated for a max 300mA draw!

Power Pads

Used to start the power rails.
Second GND is to easily short RESET ton GND when needed.

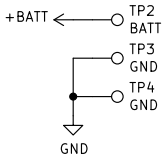

Serial Programming

Interface to program the control system like an Arduino Nano using a UART adapter.

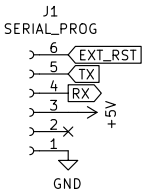

Centered around an ATmega328P. Designed for up to 20V.
Built in 6-axis IMU, digital barometer, communication, and voltage regultors.
Designed for use with I2C modules, 9 GPIO pins also available for other systems
Power rails integrated on rear side

Savo Bajic

Sheet: /
File: flight_controller.sch

Title: Flight Controller & Power Distribution Board

Size: USLetter	Date: 2020-05-11	**Rev: 2**
KiCad E.D.A. kicad 6.0.1-79c1e3a40b~116~ubuntu21.04.1		Id: 1/1