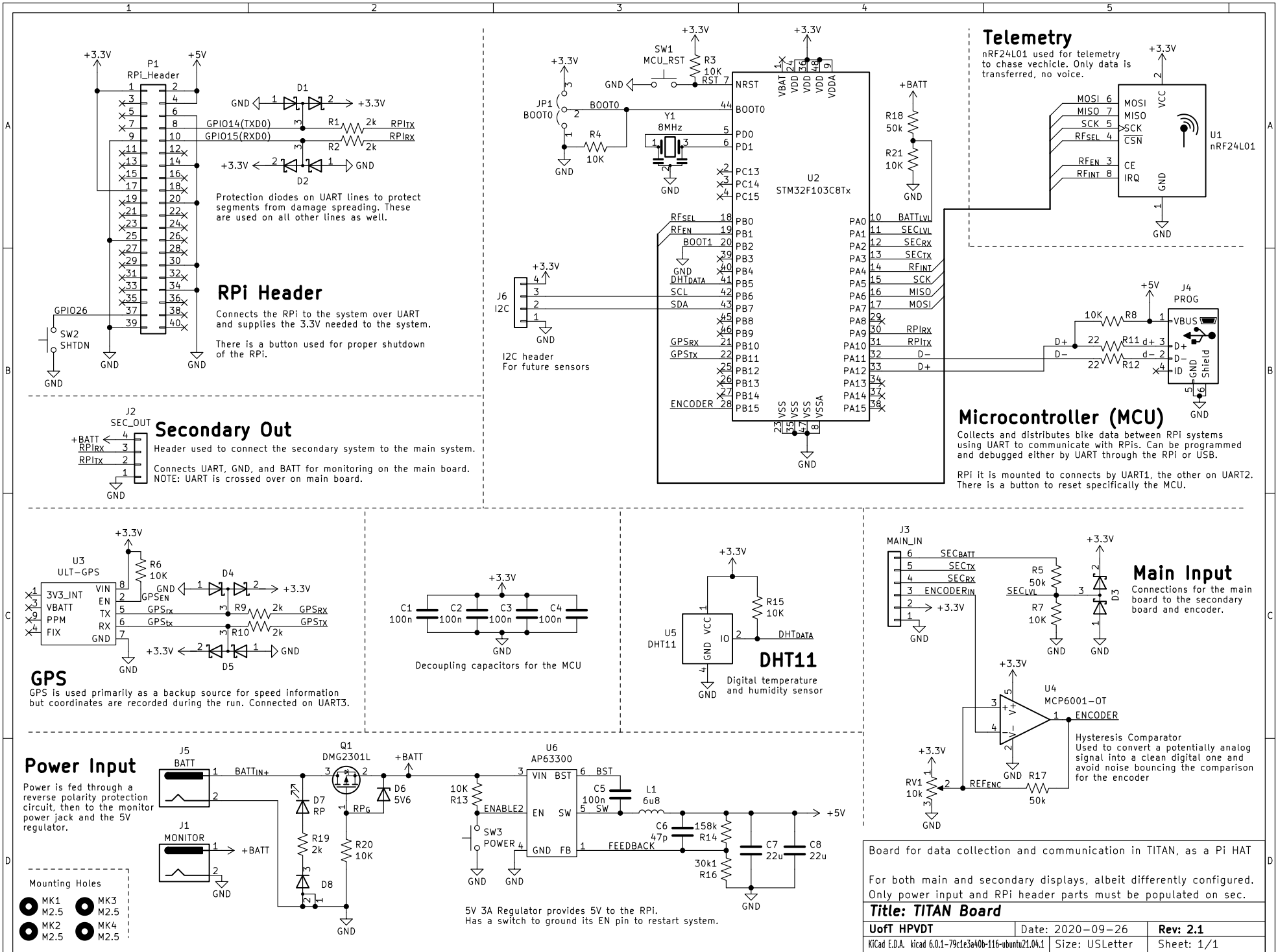
RPi Header
Connects the RPi to the system over UART and supplies the 3.3V needed to the system.
There is a button used for proper shutdown of the RPi.
Protection diodes on UART lines to protect segments from damage spreading. These are used on all other lines as well.
Telemetry
nRF24L01 used for telemetry to chase vechicle. Only data is transferred, no voice.
Secondary Out
Header used to connect the secondary system to the main system.
Connects UART, GND, and BATT for monitoring on the main board.
NOTE: UART is crossed over on main board.
I2C header
For future sensors
Microcontroller (MCU)
Collects and distributes bike data between RPi systems using UART to communicate with RPis. Can be programmed and debugged either by UART through the RPi or USB.
RPi it is mounted to connects by UART1, the other on UART2.
There is a button to reset specifically the MCU.
GPS
GPS is used primarily as a backup source for speed information but coordinates are recorded during the run. Connected on UART3.
Decoupling capacitors for the MCU
DHT11
Digital temperature and humidity sensor
Main Input
Connections for the main board to the secondary board and encoder.
Hysteresis Comparator
Used to convert a potentially analog signal into a clean digital one and avoid noise bouncing the comparison for the encoder
Power Input
Power is fed through a reverse polarity protection circuit, then to the monitor power jack and the 5V regulator.
5V 3A Regulator provides 5V to the RPi.
Has a switch to ground its EN pin to restart system.
Mounting Holes
MK1 M2.5
MK2 M2.5
MK3 M2.5
MK4 M2.5
Board for data collection and communication in TITAN, as a Pi HAT
For both main and secondary displays, albeit differently configured.
Only power input and RPi header parts must be populated on sec.
Title: TITAN Board
UofT HPVDT
Date: 2020-09-26
Rev: 2.1
KiCad E.D.A. kicad 6.0.1-79c1e3a40b-116-ubuntu21.04.1
Size: USLetter
Sheet: 1/1